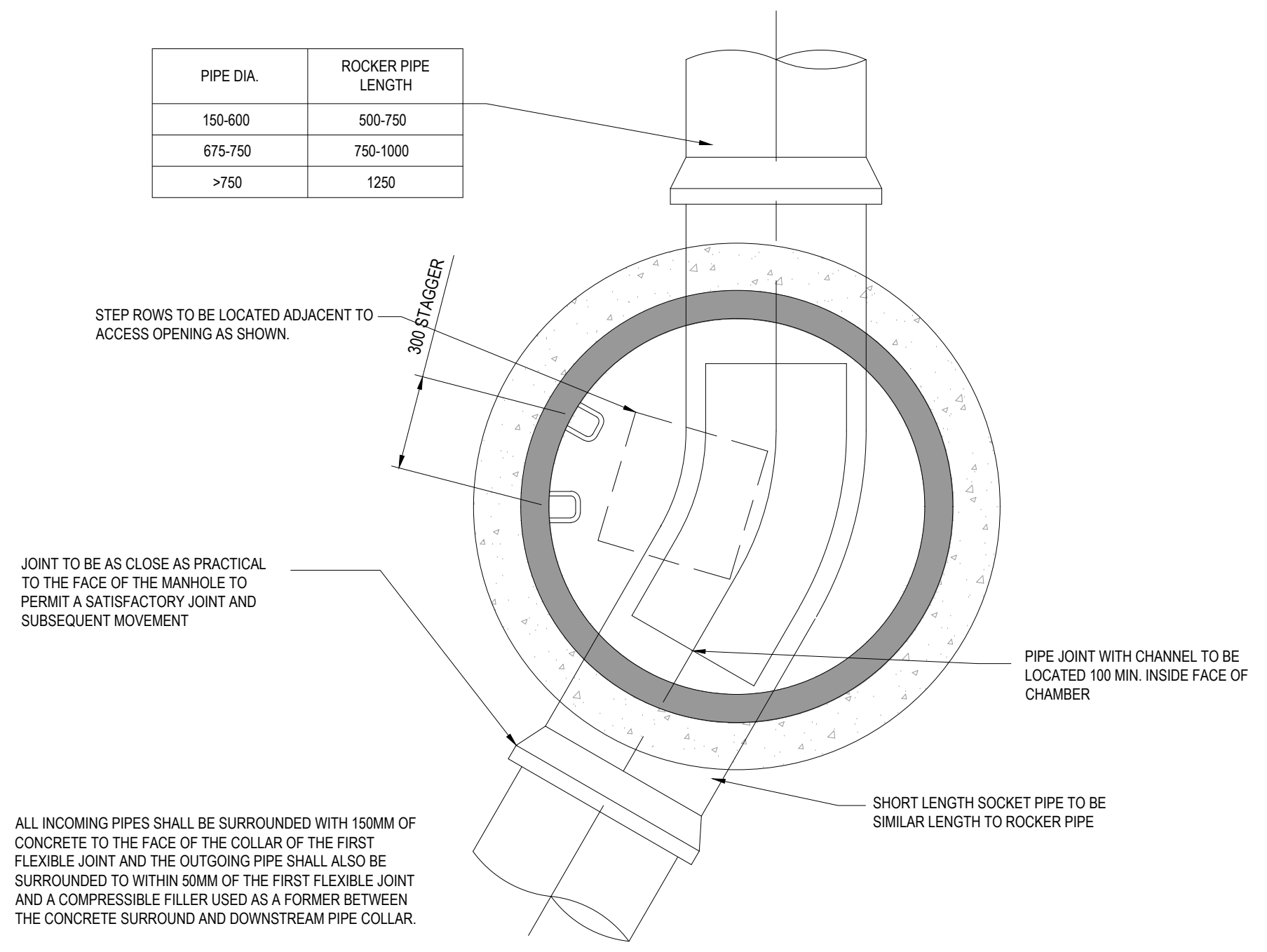

PIPE DIA.	ROCKER PIPE LENGTH
150-600	500-750
675-750	750-1000
>750	1250

300 STAGGER
STEP ROWS TO BE LOCATED ADJACENT TO ACCESS OPENING AS SHOWN.
JOINT TO BE AS CLOSE AS PRACTICAL TO THE FACE OF THE MANHOLE TO PERMIT A SATISFACTORY JOINT AND SUBSEQUENT MOVEMENT
PIPE JOINT WITH CHANNEL TO BE LOCATED 100 MIN. INSIDE FACE OF CHAMBER
SHORT LENGTH SOCKET PIPE TO BE SIMILAR LENGTH TO ROCKER PIPE
ALL INCOMING PIPES SHALL BE SURROUNDED WITH 150MM OF CONCRETE TO THE FACE OF THE COLLAR OF THE FIRST FLEXIBLE JOINT AND THE OUTGOING PIPE SHALL ALSO BE SURROUNDED TO WITHIN 50MM OF THE FIRST FLEXIBLE JOINT AND A COMPRESSIBLE FILLER USED AS A FORMER BETWEEN THE CONCRETE SURROUND AND DOWNSTREAM PIPE COLLAR.

TYPICAL MANHOLE PLAN
(SCALE 1:20)

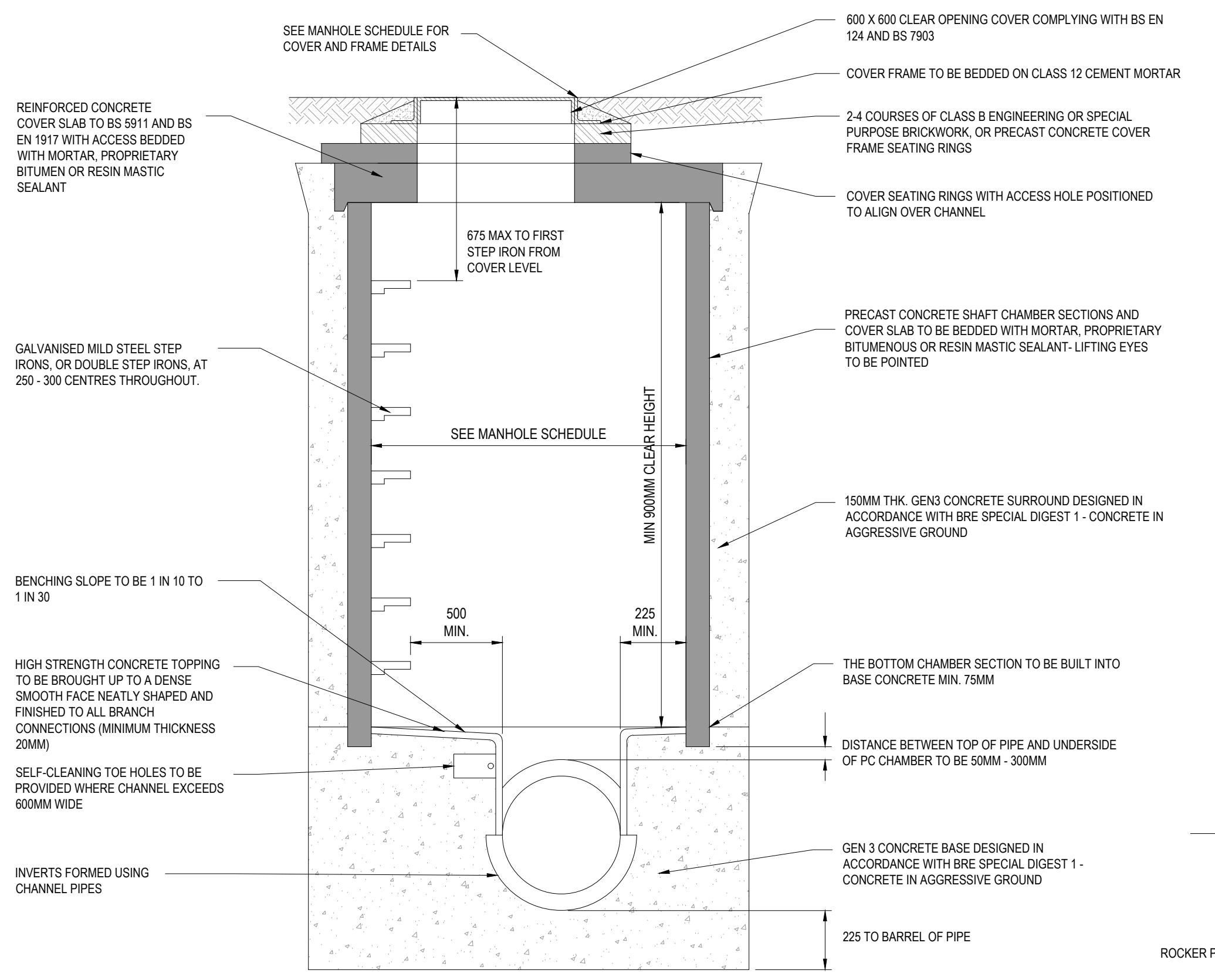
SEE MANHOLE SCHEDULE FOR COVER AND FRAME DETAILS
600 X 600 CLEAR OPENING COVER COMPLYING WITH BS EN 124 AND BS 7903
COVER FRAME TO BE BEDDED ON CLASS 12 CEMENT MORTAR
REINFORCED CONCRETE COVER SLAB TO BS 5911 AND BS EN 1917 WITH ACCESS BEDDED WITH MORTAR, PROPRIETARY BITUMEN OR RESIN MASTIC SEALANT
2-4 COURSES OF CLASS B ENGINEERING OR SPECIAL PURPOSE BRICKWORK, OR PRECAST CONCRETE COVER FRAME SEATING RINGS
COVER SEATING RINGS WITH ACCESS HOLE POSITIONED TO ALIGN OVER CHANNEL
675 MAX TO FIRST STEP IRON FROM COVER LEVEL
PRECAST CONCRETE SHAFT CHAMBER SECTIONS AND COVER SLAB TO BE BEDDED WITH MORTAR, PROPRIETARY BITUMENOUS OR RESIN MASTIC SEALANT- LIFTING EYES TO BE POINTED
GALVANISED MILD STEEL STEP IRONS, OR DOUBLE STEP IRONS, AT 250 - 300 CENTRES THROUGHOUT.
SEE MANHOLE SCHEDULE
MIN 900MM CLEAR HEIGHT
150MM THK. GEN3 CONCRETE SURROUND DESIGNED IN ACCORDANCE WITH BRE SPECIAL DIGEST 1 - CONCRETE IN AGGRESSIVE GROUND
BENCHING SLOPE TO BE 1 IN 10 TO 1 IN 30
500 MIN.
225 MIN.
HIGH STRENGTH CONCRETE TOPPING TO BE BROUGHT UP TO A DENSE SMOOTH FACE NEATLY SHAPED AND FINISHED TO ALL BRANCH CONNECTIONS (MINIMUM THICKNESS 20MM)
THE BOTTOM CHAMBER SECTION TO BE BUILT INTO BASE CONCRETE MIN. 75MM
DISTANCE BETWEEN TOP OF PIPE AND UNDERSIDE OF PC CHAMBER TO BE 50MM - 300MM
SELF-CLEANING TOE HOLES TO BE PROVIDED WHERE CHANNEL EXCEEDS 600MM WIDE
GEN 3 CONCRETE BASE DESIGNED IN ACCORDANCE WITH BRE SPECIAL DIGEST 1 - CONCRETE IN AGGRESSIVE GROUND
INVERTS FORMED USING CHANNEL PIPES
225 TO BARREL OF PIPE

TYPICAL TYPE 2 CONCRETE MANHOLE (PCC) DETAIL
MAX. DEPTH FROM COVER LEVEL TO SOFFIT OF PIPE 3.0m
(SCALE 1:20)

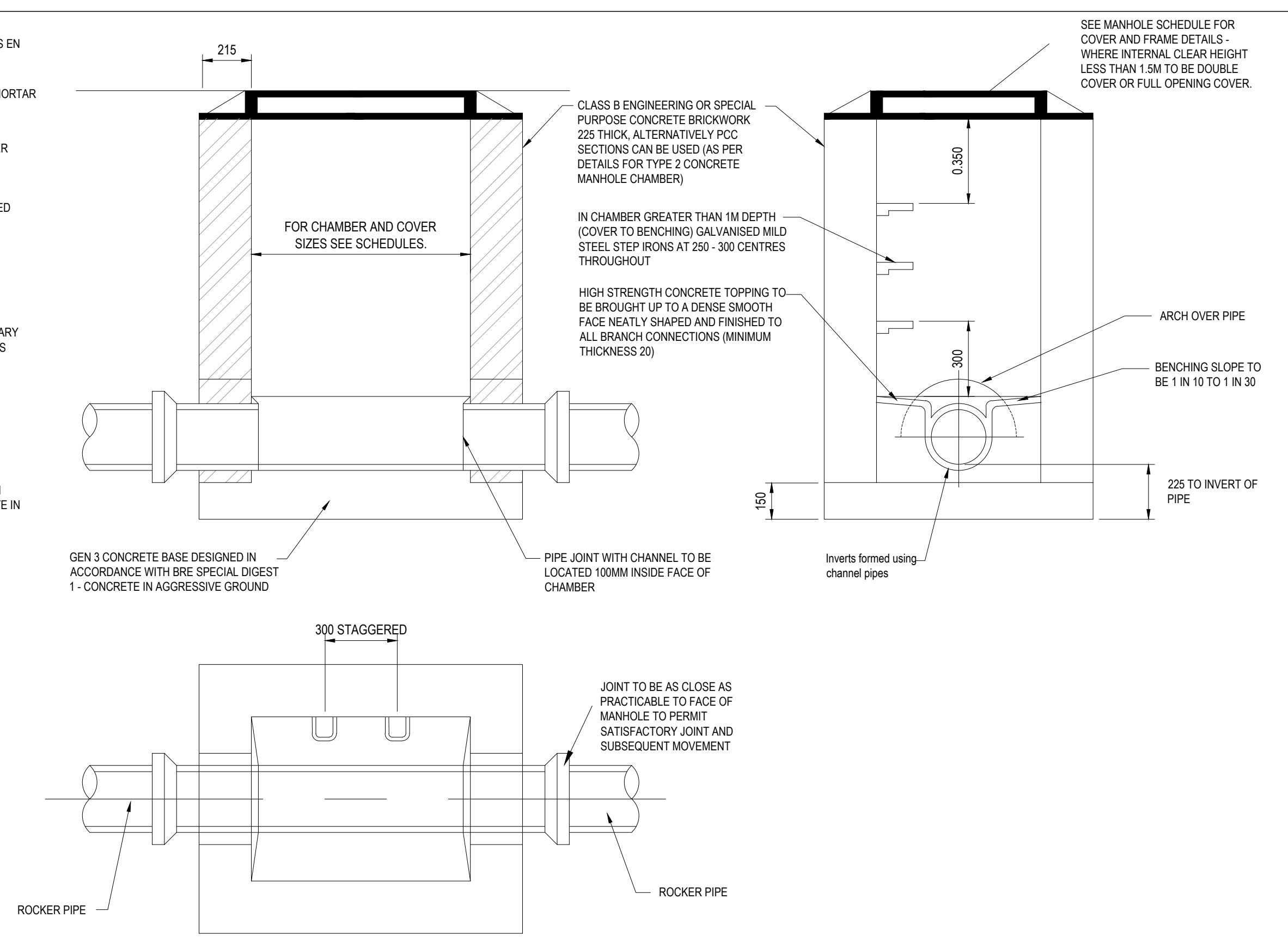
215
FOR CHAMBER AND COVER SIZES SEE SCHEDULES.
CLASS B ENGINEERING OR SPECIAL PURPOSE CONCRETE BRICKWORK 225 THICK, ALTERNATIVELY PCC SECTIONS CAN BE USED (AS PER DETAILS FOR TYPE 2 CONCRETE MANHOLE CHAMBER)
IN CHAMBER GREATER THAN 1M DEPTH (COVER TO BENCHING) GALVANISED MILD STEEL STEP IRONS AT 250 - 300 CENTRES THROUGHOUT
HIGH STRENGTH CONCRETE TOPPING TO BE BROUGHT UP TO A DENSE SMOOTH FACE NEATLY SHAPED AND FINISHED TO ALL BRANCH CONNECTIONS (MINIMUM THICKNESS 20)
SEE MANHOLE SCHEDULE FOR COVER AND FRAME DETAILS - WHERE INTERNAL CLEAR HEIGHT LESS THAN 1.5M TO BE DOUBLE COVER OR FULL OPENING COVER.
0.350
300
ARCH OVER PIPE
BENCHING SLOPE TO BE 1 IN 10 TO 1 IN 30
225 TO INVERT OF PIPE
150
Inverts formed using channel pipes
GEN 3 CONCRETE BASE DESIGNED IN ACCORDANCE WITH BRE SPECIAL DIGEST 1 - CONCRETE IN AGGRESSIVE GROUND
PIPE JOINT WITH CHANNEL TO BE LOCATED 100MM INSIDE FACE OF CHAMBER
300 STAGGERED
JOINT TO BE AS CLOSE AS PRACTICABLE TO FACE OF MANHOLE TO PERMIT SATISFACTORY JOINT AND SUBSEQUENT MOVEMENT
ROCKER PIPE
ROCKER PIPE

TYPICAL RECTANGULAR BRICK (BRK) OR PRECAST CONCRETE (PCC) MANHOLE DETAIL
(SCALE 1:20)

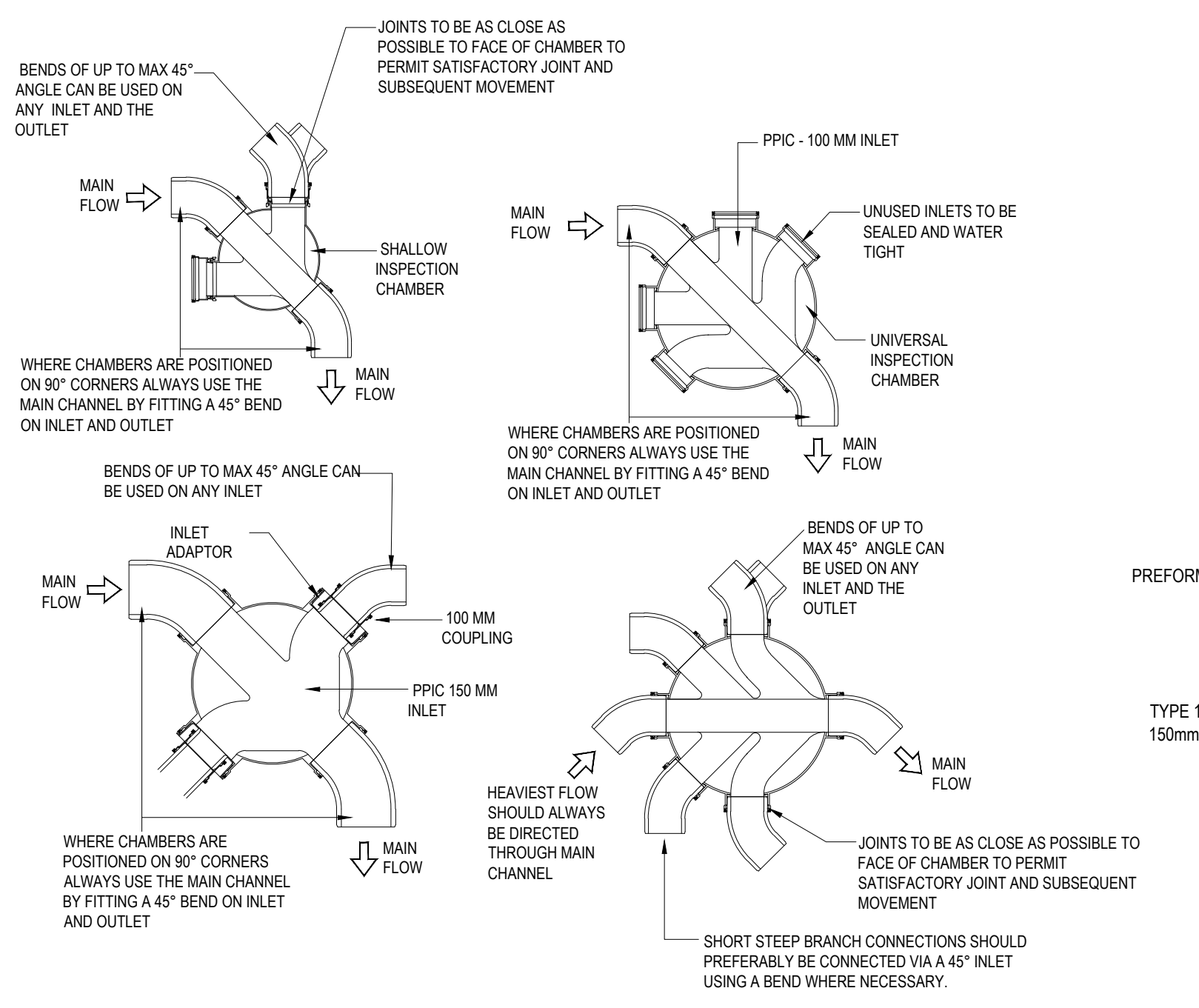
BENDS OF UP TO MAX 45° ANGLE CAN BE USED ON ANY INLET AND THE OUTLET
JOINTS TO BE AS CLOSE AS POSSIBLE TO FACE OF CHAMBER TO PERMIT SATISFACTORY JOINT AND SUBSEQUENT MOVEMENT
MAIN FLOW
SHALLOW INSPECTION CHAMBER
WHERE CHAMBERS ARE POSITIONED ON 90° CORNERS ALWAYS USE THE MAIN CHANNEL BY FITTING A 45° BEND ON INLET AND OUTLET
MAIN FLOW
PPIC - 100 MM INLET
MAIN FLOW
UNUSED INLETS TO BE SEALED AND WATER TIGHT
UNIVERSAL INSPECTION CHAMBER
WHERE CHAMBERS ARE POSITIONED ON 90° CORNERS ALWAYS USE THE MAIN CHANNEL BY FITTING A 45° BEND ON INLET AND OUTLET
MAIN FLOW
BENDS OF UP TO MAX 45° ANGLE CAN BE USED ON ANY INLET
INLET ADAPTOR
MAIN FLOW
100 MM COUPLING
PPIC 150 MM INLET
WHERE CHAMBERS ARE POSITIONED ON 90° CORNERS ALWAYS USE THE MAIN CHANNEL BY FITTING A 45° BEND ON INLET AND OUTLET
MAIN FLOW
BENDS OF UP TO MAX 45° ANGLE CAN BE USED ON ANY INLET AND THE OUTLET
HEAVIEST FLOW SHOULD ALWAYS BE DIRECTED THROUGH MAIN CHANNEL
MAIN FLOW
JOINTS TO BE AS CLOSE AS POSSIBLE TO FACE OF CHAMBER TO PERMIT SATISFACTORY JOINT AND SUBSEQUENT MOVEMENT
SHORT STEEP BRANCH CONNECTIONS SHOULD PREFERABLY BE CONNECTED VIA A 45° INLET USING A BEND WHERE NECESSARY.

INSPECTION CHAMBER BASE DETAILS
(SCALE 1:20)

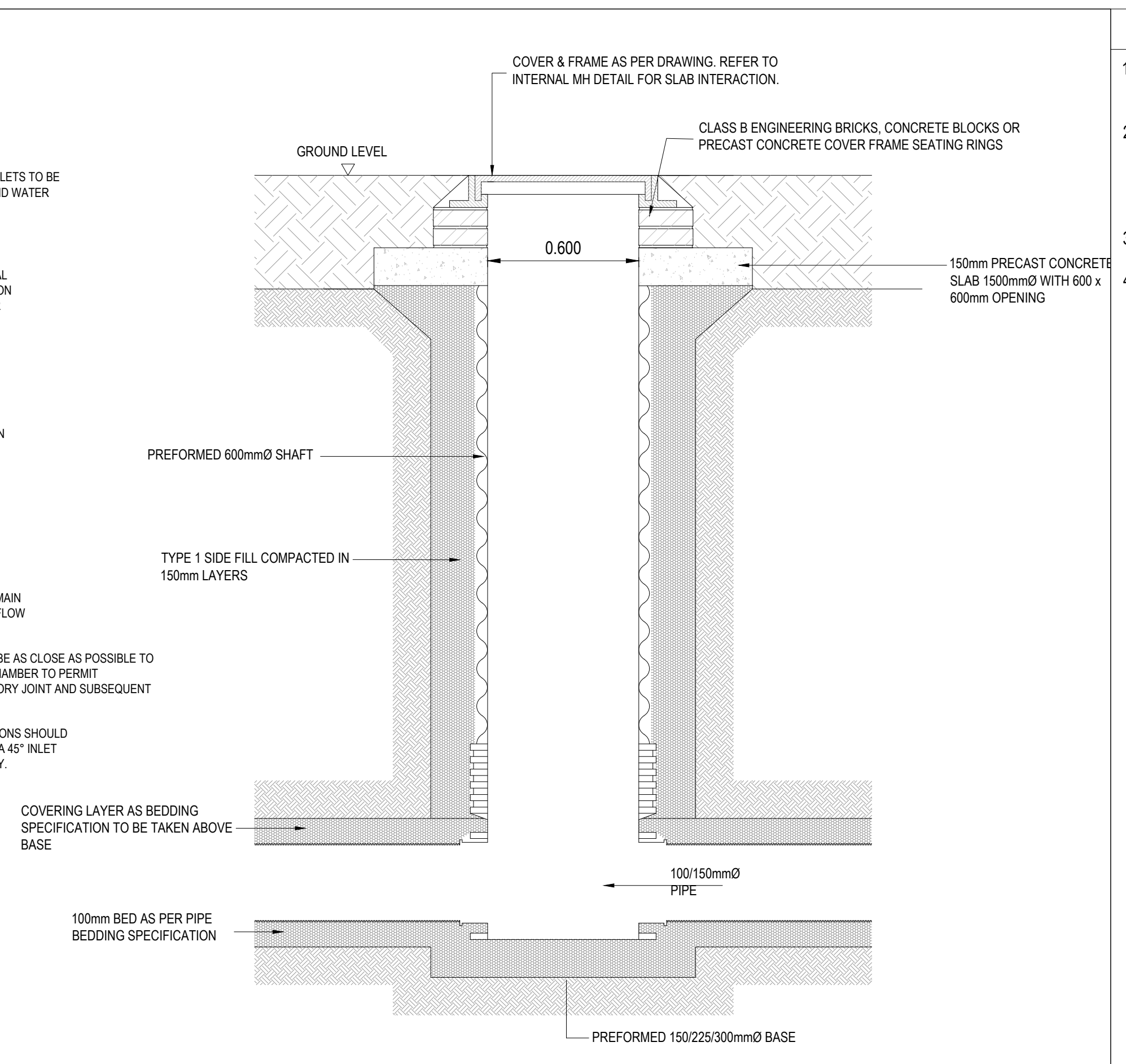
COVER & FRAME AS PER DRAWING. REFER TO INTERNAL MH DETAIL FOR SLAB INTERACTION.
GROUND LEVEL
CLASS B ENGINEERING BRICKS, CONCRETE BLOCKS OR PRECAST CONCRETE COVER FRAME SEATING RINGS
0.600
150mm PRECAST CONCRETE SLAB 1500mmØ WITH 600 x 600mm OPENING
PREFORMED 600mmØ SHAFT
TYPE 1 SIDE FILL COMPACTED IN 150mm LAYERS
COVERING LAYER AS BEDDING SPECIFICATION TO BE TAKEN ABOVE BASE
100/150mmØ PIPE
100mm BED AS PER PIPE BEDDING SPECIFICATION
PREFORMED 150/225/300mmØ BASE

600Ø POLY-PROPELENE INSPECTION CHAMBER

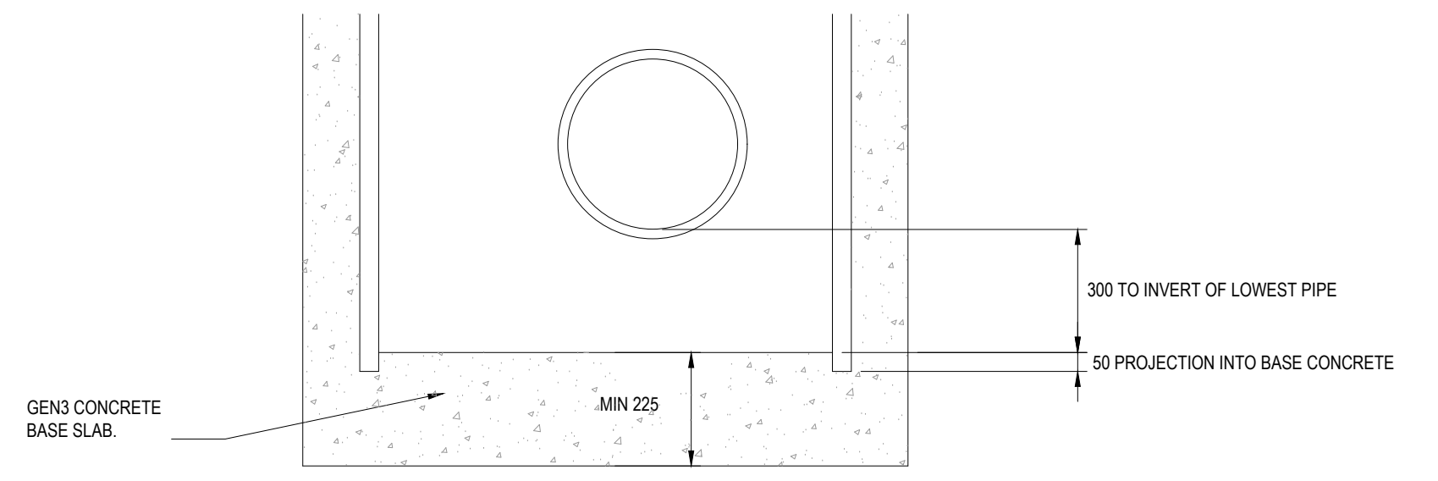
300 TO INVERT OF LOWEST PIPE
50 PROJECTION INTO BASE CONCRETE
GEN3 CONCRETE BASE SLAB.
MIN 225

CATCH PIT DETAIL
(SCALE 1:20)

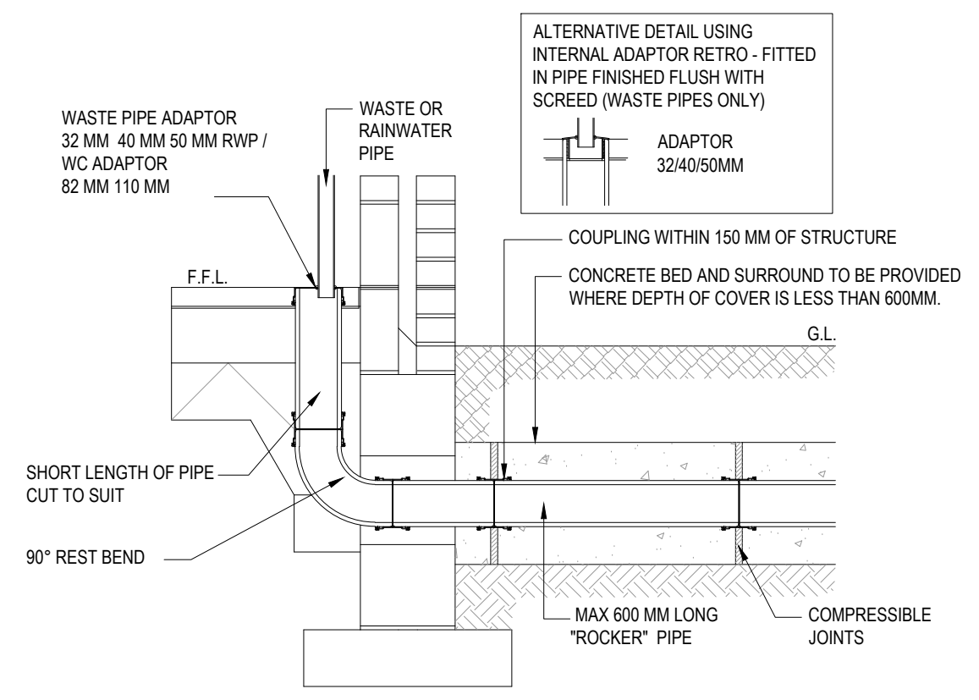
ALTERNATIVE DETAIL USING INTERNAL ADAPTOR RETRO - FITTED IN PIPE FINISHED FLUSH WITH SCREED (WASTE PIPES ONLY)
ADAPTOR 32/40/50MM
WASTE PIPE ADAPTOR 32 MM 40 MM 50 MM RWP / WC ADAPTOR 82 MM 110 MM
WASTE OR RAINWATER PIPE
COUPLING WITHIN 150 MM OF STRUCTURE
CONCRETE BED AND SURROUND TO BE PROVIDED WHERE DEPTH OF COVER IS LESS THAN 600MM.
F.F.L.
G.L.
SHORT LENGTH OF PIPE CUT TO SUIT
90° REST BEND
MAX 600 MM LONG "ROCKER" PIPE
COMPRESSIBLE JOINTS

INTERNAL WASTE PIPE CONNECTION DETAIL
(SCALE 1:20)

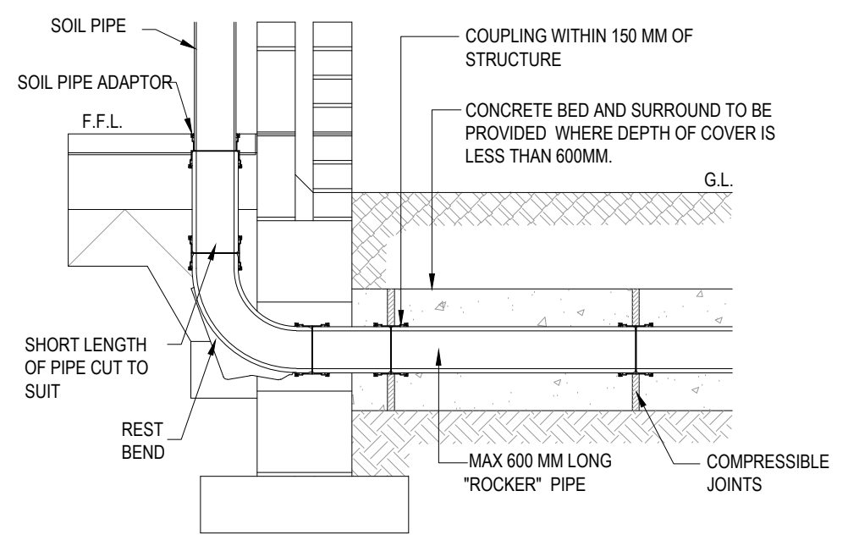
SOIL PIPE
SOIL PIPE ADAPTOR
F.F.L.
COUPLING WITHIN 150 MM OF STRUCTURE
CONCRETE BED AND SURROUND TO BE PROVIDED WHERE DEPTH OF COVER IS LESS THAN 600MM.
G.L.
SHORT LENGTH OF PIPE CUT TO SUIT
REST BEND
MAX 600 MM LONG "ROCKER" PIPE
COMPRESSIBLE JOINTS

SOIL & VENT PIPE / STUB STACK / W.C. CONNECTION DETAIL
(SCALE 1:20)

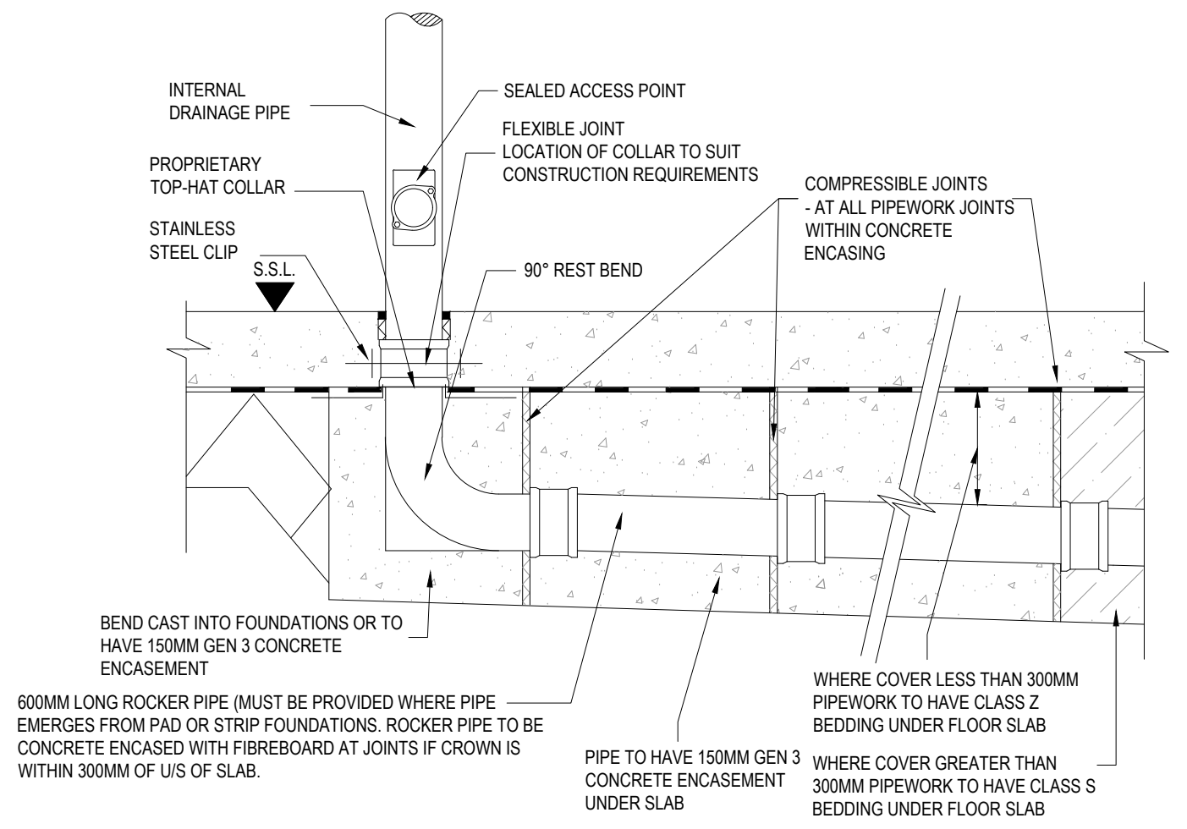
INTERNAL DRAINAGE PIPE
SEALED ACCESS POINT
FLEXIBLE JOINT LOCATION OF COLLAR TO SUIT CONSTRUCTION REQUIREMENTS
PROPRIETARY TOP-HAT COLLAR
STAINLESS STEEL CLIP
S.S.L.
90° REST BEND
COMPRESSIBLE JOINTS - AT ALL PIPEWORK JOINTS WITHIN CONCRETE ENCASING
BEND CAST INTO FOUNDATIONS OR TO HAVE 150MM GEN 3 CONCRETE ENCASEMENT
600MM LONG ROCKER PIPE (MUST BE PROVIDED WHERE PIPE EMERGES FROM PAD OR STRIP FOUNDATIONS. ROCKER PIPE TO BE CONCRETE ENCASED WITH FIBREBOARD AT JOINTS IF CROWN IS WITHIN 300MM OF U/S OF SLAB.
PIPE TO HAVE 150MM GEN 3 CONCRETE ENCASEMENT UNDER SLAB
WHERE COVER LESS THAN 300MM PIPEWORK TO HAVE CLASS Z BEDDING UNDER FLOOR SLAB
WHERE COVER GREATER THAN 300MM PIPEWORK TO HAVE CLASS S BEDDING UNDER FLOOR SLAB

DRAINAGE UNDER BUILDINGS
(SCALE 1:20)

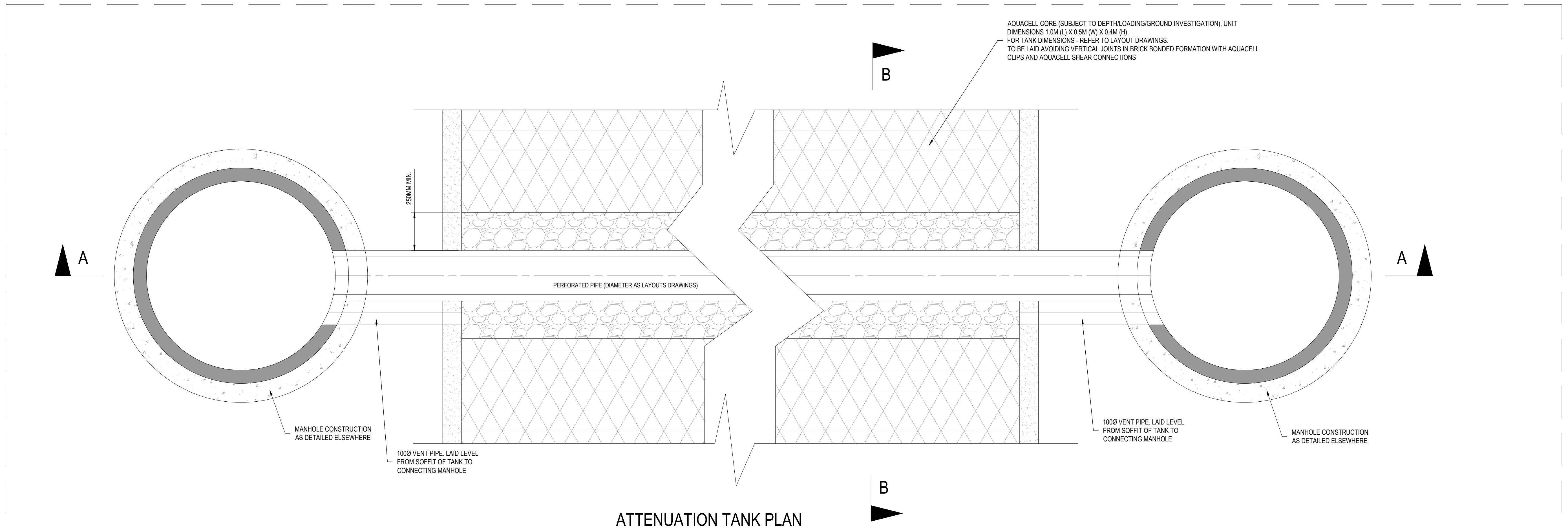
AQUACELL CORE (SUBJECT TO DEPTH/LOADING/GROUND INVESTIGATION), UNIT DIMENSIONS 1.0M (L) X 0.5M (W) X 0.4M (H). FOR TANK DIMENSIONS - REFER TO LAYOUT DRAWINGS. TO BE LAID AVOIDING VERTICAL JOINTS IN BRICK BONDED FORMATION WITH AQUACELL CLIPS AND AQUACELL SHEAR CONNECTIONS
B
A
250MM MIN.
PERFORATED PIPE (DIAMETER AS LAYOUTS DRAWINGS)
A
MANHOLE CONSTRUCTION AS DETAILED ELSEWHERE
100Ø VENT PIPE. LAID LEVEL FROM SOFFIT OF TANK TO CONNECTING MANHOLE
100Ø VENT PIPE. LAID LEVEL FROM SOFFIT OF TANK TO CONNECTING MANHOLE
MANHOLE CONSTRUCTION AS DETAILED ELSEWHERE
B

ATTENUATION TANK PLAN
(SCALE 1:20)

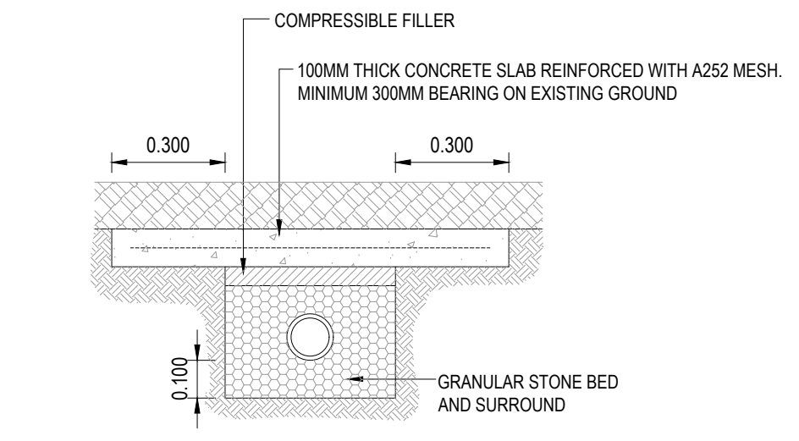
COMPRESSIBLE FILLER
100MM THICK CONCRETE SLAB REINFORCED WITH A252 MESH. MINIMUM 300MM BEARING ON EXISTING GROUND
0.300
0.300
0.100
GRANULAR STONE BED AND SURROUND

PIPE PROTECTION DETAIL (TRENCH WIDTH VARIES)
(SCALE 1:20)

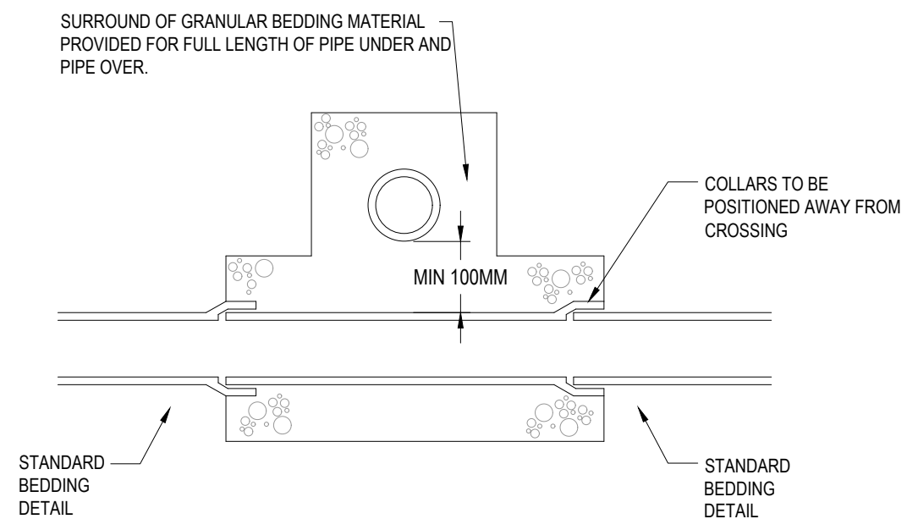
SURROUND OF GRANULAR BEDDING MATERIAL PROVIDED FOR FULL LENGTH OF PIPE UNDER AND PIPE OVER.
COLLARS TO BE POSITIONED AWAY FROM CROSSING
MIN 100MM
STANDARD BEDDING DETAIL
STANDARD BEDDING DETAIL

PIPE CROSSINGS DETAIL
(SCALE 1:20)

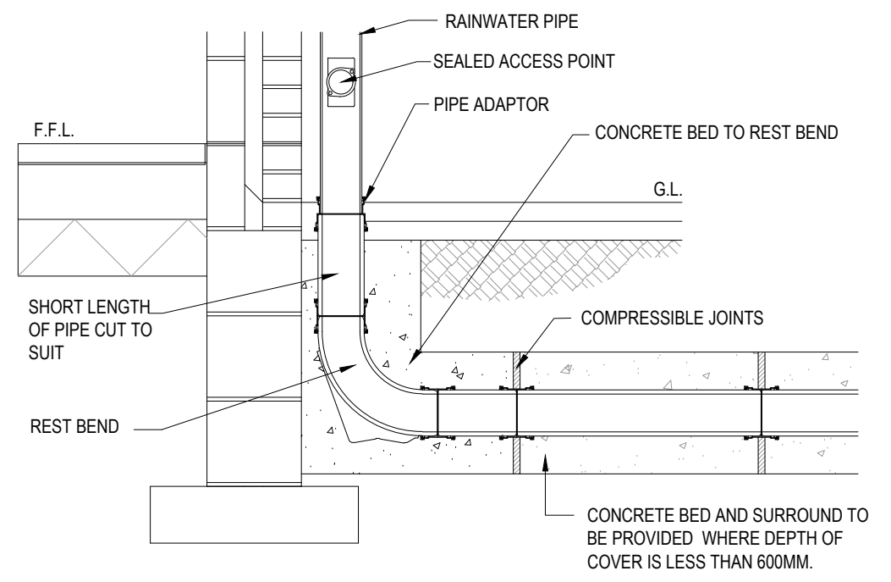
RAINWATER PIPE
SEALED ACCESS POINT
PIPE ADAPTOR
CONCRETE BED TO REST BEND
F.F.L.
G.L.
SHORT LENGTH OF PIPE CUT TO SUIT
COMPRESSIBLE JOINTS
REST BEND
CONCRETE BED AND SURROUND TO BE PROVIDED WHERE DEPTH OF COVER IS LESS THAN 600MM.

RWP CONNECTION DETAIL
(SCALE 1:20)

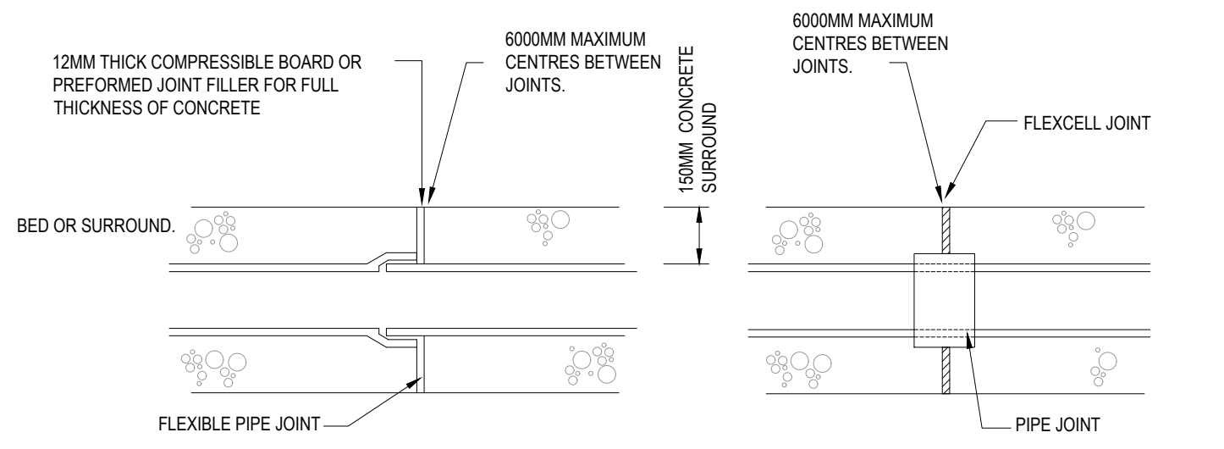
12MM THICK COMPRESSIBLE BOARD OR PREFORMED JOINT FILLER FOR FULL THICKNESS OF CONCRETE
6000MM MAXIMUM CENTRES BETWEEN JOINTS.
150MM CONCRETE SURROUND
6000MM MAXIMUM CENTRES BETWEEN JOINTS.
FLEXCELL JOINT
BED OR SURROUND.
FLEXIBLE PIPE JOINT
PIPE JOINT

EXPANSION JOINT FOR CONCRETE BED AND SURROUND
(SCALE 1:20)

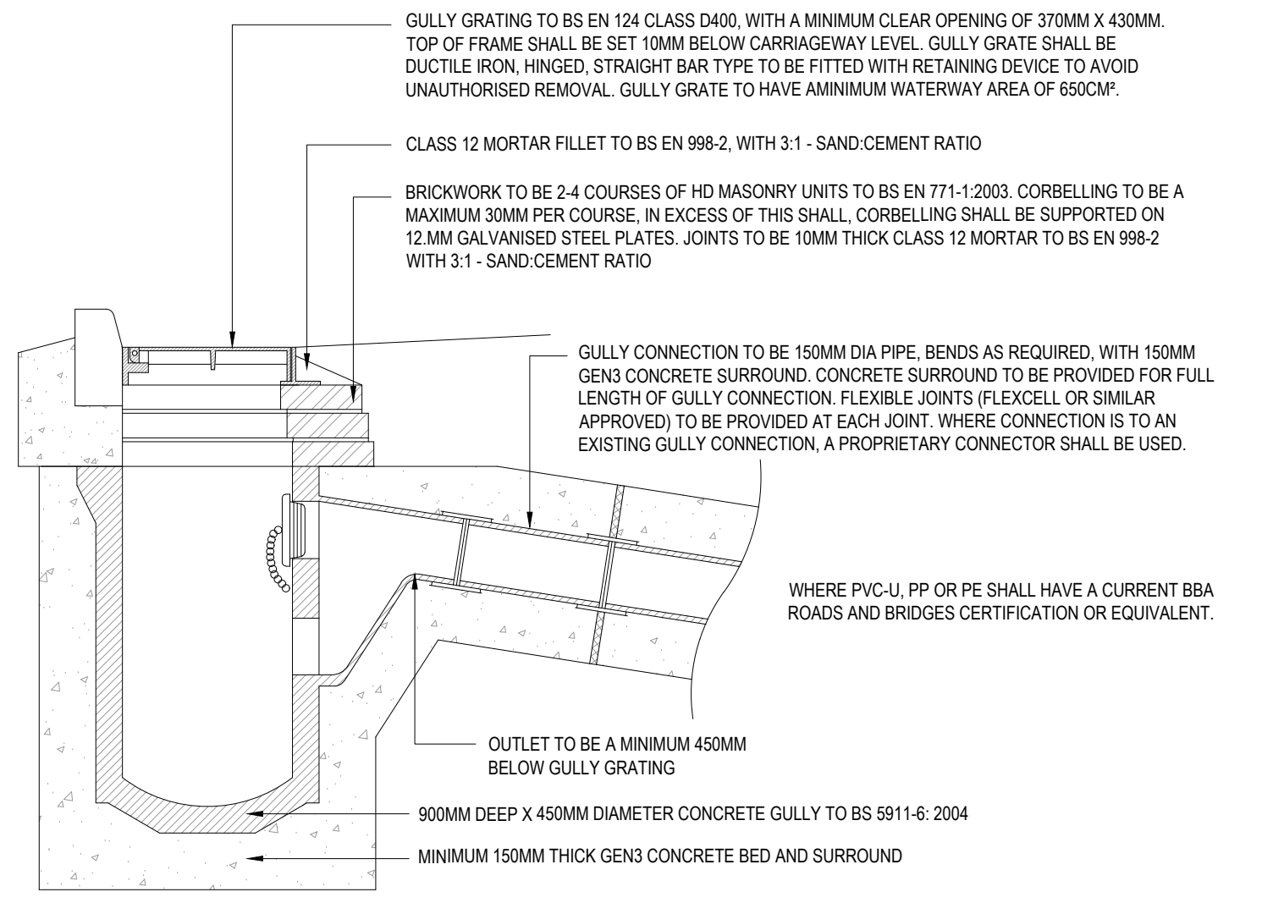
GULLY GRATING TO BS EN 124 CLASS D400, WITH A MINIMUM CLEAR OPENING OF 370MM X 430MM. TOP OF FRAME SHALL BE SET 10MM BELOW CARRIAGEWAY LEVEL. GULLY GRATE SHALL BE DUCTILE IRON, HINGED, STRAIGHT BAR TYPE TO BE FITTED WITH RETAINING DEVICE TO AVOID UNAUTHORISED REMOVAL. GULLY GRATE TO HAVE AMINIMUM WATERWAY AREA OF 650CM².
CLASS 12 MORTAR FILLET TO BS EN 998-2, WITH 3:1 - SAND:CEMENT RATIO
BRICKWORK TO BE 2-4 COURSES OF HD MASONRY UNITS TO BS EN 771-1:2003. CORBELLING TO BE A MAXIMUM 30MM PER COURSE, IN EXCESS OF THIS SHALL, CORBELLING SHALL BE SUPPORTED ON 12.MM GALVANISED STEEL PLATES. JOINTS TO BE 10MM THICK CLASS 12 MORTAR TO BS EN 998-2 WITH 3:1 - SAND:CEMENT RATIO
GULLY CONNECTION TO BE 150MM DIA PIPE, BENDS AS REQUIRED, WITH 150MM GEN3 CONCRETE SURROUND. CONCRETE SURROUND TO BE PROVIDED FOR FULL LENGTH OF GULLY CONNECTION. FLEXIBLE JOINTS (FLEXCELL OR SIMILAR APPROVED) TO BE PROVIDED AT EACH JOINT. WHERE CONNECTION IS TO AN EXISTING GULLY CONNECTION, A PROPRIETARY CONNECTOR SHALL BE USED.
WHERE PVC-U, PP OR PE SHALL HAVE A CURRENT BBA ROADS AND BRIDGES CERTIFICATION OR EQUIVALENT.
OUTLET TO BE A MINIMUM 450MM BELOW GULLY GRATING
900MM DEEP X 450MM DIAMETER CONCRETE GULLY TO BS 5911-6: 2004
MINIMUM 150MM THICK GEN3 CONCRETE BED AND SURROUND

ROAD GULLY(G) DETAIL - TYPE 1
(SCALE 1:20)

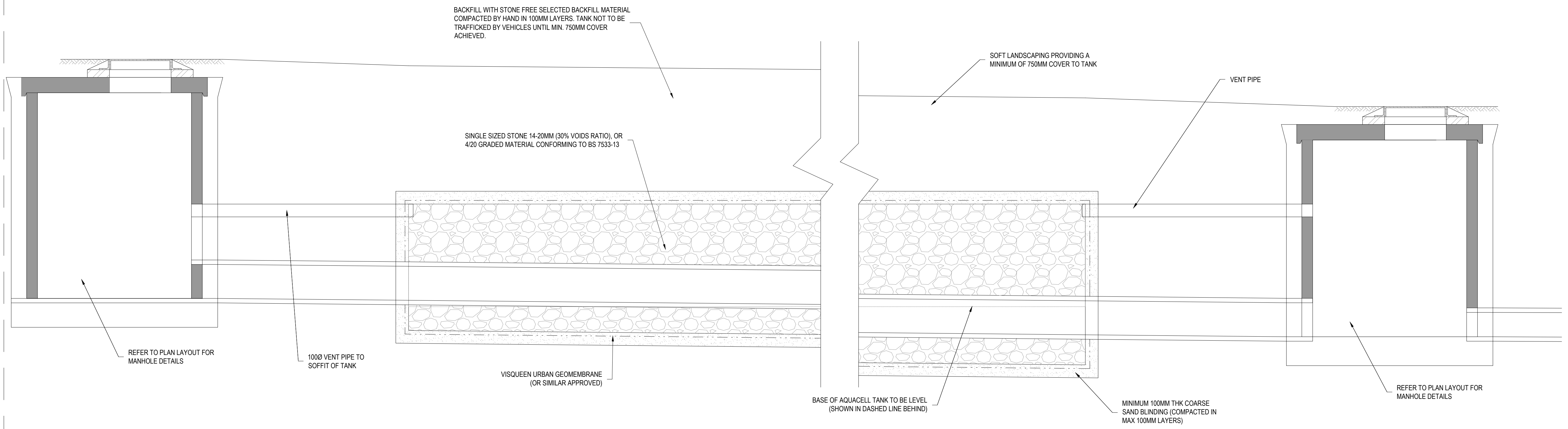
BACKFILL WITH STONE FREE SELECTED BACKFILL MATERIAL COMPACTED BY HAND IN 100MM LAYERS. TANK NOT TO BE TRAFFICKED BY VEHICLES UNTIL MIN. 750MM COVER ACHIEVED.
SOFT LANDSCAPING PROVIDING A MINIMUM OF 750MM COVER TO TANK
VENT PIPE
SINGLE SIZED STONE 14-20MM (30% VOIDS RATIO), OR 4/20 GRADED MATERIAL CONFORMING TO BS 7533-13
REFER TO PLAN LAYOUT FOR MANHOLE DETAILS
100Ø VENT PIPE TO SOFFIT OF TANK
VISQUEEN URBAN GEOMEMBRANE (OR SIMILAR APPROVED)
BASE OF AQUACELL TANK TO BE LEVEL (SHOWN IN DASHED LINE BEHIND)
MINIMUM 100MM THK COARSE SAND BLINDING (COMPACTED IN MAX 100MM LAYERS)
REFER TO PLAN LAYOUT FOR MANHOLE DETAILS

LONG SECTION A-A
(SCALE 1:20)

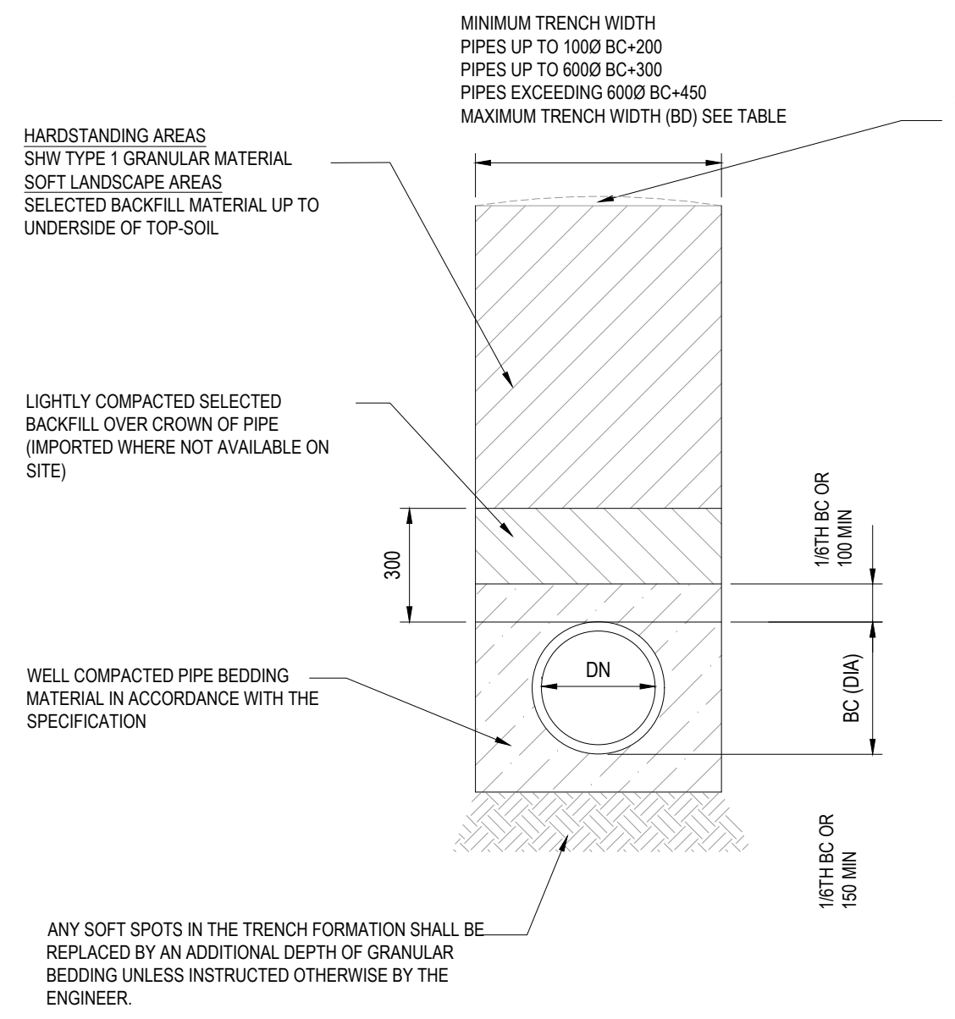
MINIMUM TRENCH WIDTH
PIPES UP TO 100Ø BC+200
PIPES UP TO 600Ø BC+300
PIPES EXCEEDING 600Ø BC+450
MAXIMUM TRENCH WIDTH (BD) SEE TABLE
HARDSTANDING AREAS
SHW TYPE 1 GRANULAR MATERIAL
SOFT LANDSCAPE AREAS
SELECTED BACKFILL MATERIAL UP TO UNDERSIDE OF TOP-SOIL
LIGHTLY COMPACTED SELECTED BACKFILL OVER CROWN OF PIPE (IMPORTED WHERE NOT AVAILABLE ON SITE)
300
1/6TH BC OR 100 MIN
DN
BC (DIA)
WELL COMPACTED PIPE BEDDING MATERIAL IN ACCORDANCE WITH THE SPECIFICATION
1/6TH BC OR 150 MIN
ANY SOFT SPOTS IN THE TRENCH FORMATION SHALL BE REPLACED BY AN ADDITIONAL DEPTH OF GRANULAR BEDDING UNLESS INSTRUCTED OTHERWISE BY THE ENGINEER.

CLASS S - 360° GRANULAR SURROUND PIPE BEDDING DETAIL
(SCALE 1:20)

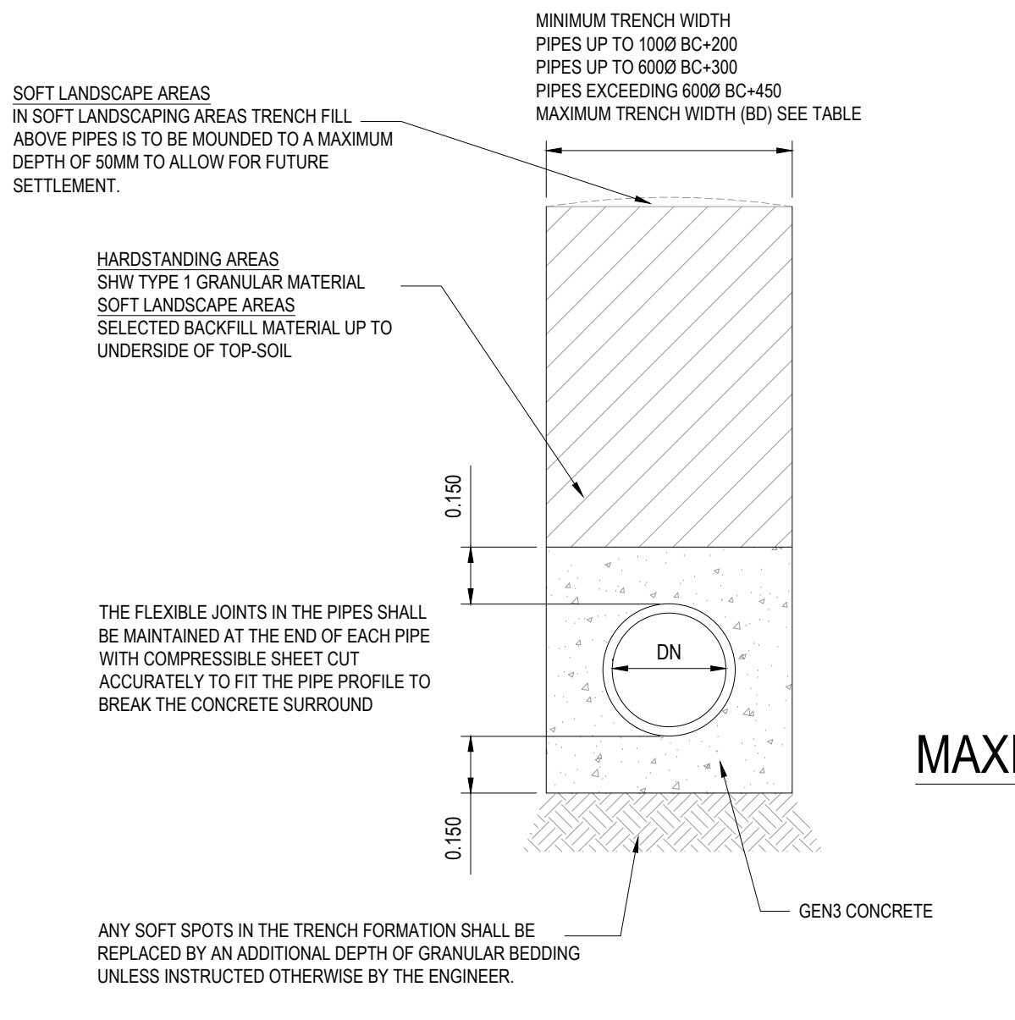
MINIMUM TRENCH WIDTH
PIPES UP TO 100Ø BC+200
PIPES UP TO 600Ø BC+300
PIPES EXCEEDING 600Ø BC+450
MAXIMUM TRENCH WIDTH (BD) SEE TABLE
SOFT LANDSCAPE AREAS
IN SOFT LANDSCAPING AREAS TRENCH FILL ABOVE PIPES IS TO BE MOUNDED TO A MAXIMUM DEPTH OF 50MM TO ALLOW FOR FUTURE SETTLEMENT.
HARDSTANDING AREAS
SHW TYPE 1 GRANULAR MATERIAL
SOFT LANDSCAPE AREAS
SELECTED BACKFILL MATERIAL UP TO UNDERSIDE OF TOP-SOIL
0.150
THE FLEXIBLE JOINTS IN THE PIPES SHALL BE MAINTAINED AT THE END OF EACH PIPE WITH COMPRESSIBLE SHEET CUT ACCURATELY TO FIT THE PIPE PROFILE TO BREAK THE CONCRETE SURROUND
DN
0.150
GEN3 CONCRETE
ANY SOFT SPOTS IN THE TRENCH FORMATION SHALL BE REPLACED BY AN ADDITIONAL DEPTH OF GRANULAR BEDDING UNLESS INSTRUCTED OTHERWISE BY THE ENGINEER.

CLASS Z - CONCRETE BED AND SURROUND PIPE BEDDING DETAIL
COVER < 900mm IN VEHICULAR LOADING AND OPEN FIELD.
COVER <600mm ELSEWHERE EXCEPT UNDER BUILDINGS.
(SCALE 1:20)

Dn	Bd
150	0.6
225	0.7
300	0.85
375	1.05
450	1.15
525	1.25
600	1.35
675	1.45
750	1.50

MAXIMUM TRENCH WIDTH

RESIDUAL HAZARD REGISTER (RELATES TO CIVIL/STRUCTURAL MATTERS ONLY)
MUST BE READ IN CONJUNCTION WITH CURTINS RESIDUAL HAZARD REGISTER NDCH-CUR-XX-XX-HA-Z-00_10-001.
HAZARDS THAT SHOULD BE OBVIOUS TO A COMPETENT CONTRACTOR HAVE NOT BEEN INDICATED ON THIS DRAWING. SHOULD ANY ADDITIONAL HAZARDS BE IDENTIFIED, THE CONTRACTOR SHOULD NOTIFY ALL

HAZARD REF No.	ITEM (FEATURE, ELEMENT OR ACTIVITY)	RESIDUAL HAZARD
⚠ 1.1	Services wtihin existing highway	Damage to or striking of existing services. Concrete protection may be required.
⚠ 1.2	Drainage connections	Unable to connect SW and FW on site drainage to Welsh Water sewers.
⚠ 2.1	Existing structures	Damage to existing listed building.
⚠ 2.2	Varying ground conditons	Potential for unexpected ground conditions such as unstable ground.
⚠ 2.3	Groundwater	Attenuation tank may require weighting to resist floatation.
⚠ 3.1	Buried Services	Operatives exposure to live services during excavation works.
⚠ 4.1	Earthworks & excavations	Potential for undermining of existing structure due to excavation works.
⚠ 5.1	Ground contamination	Operatives exposure to ground contamination.

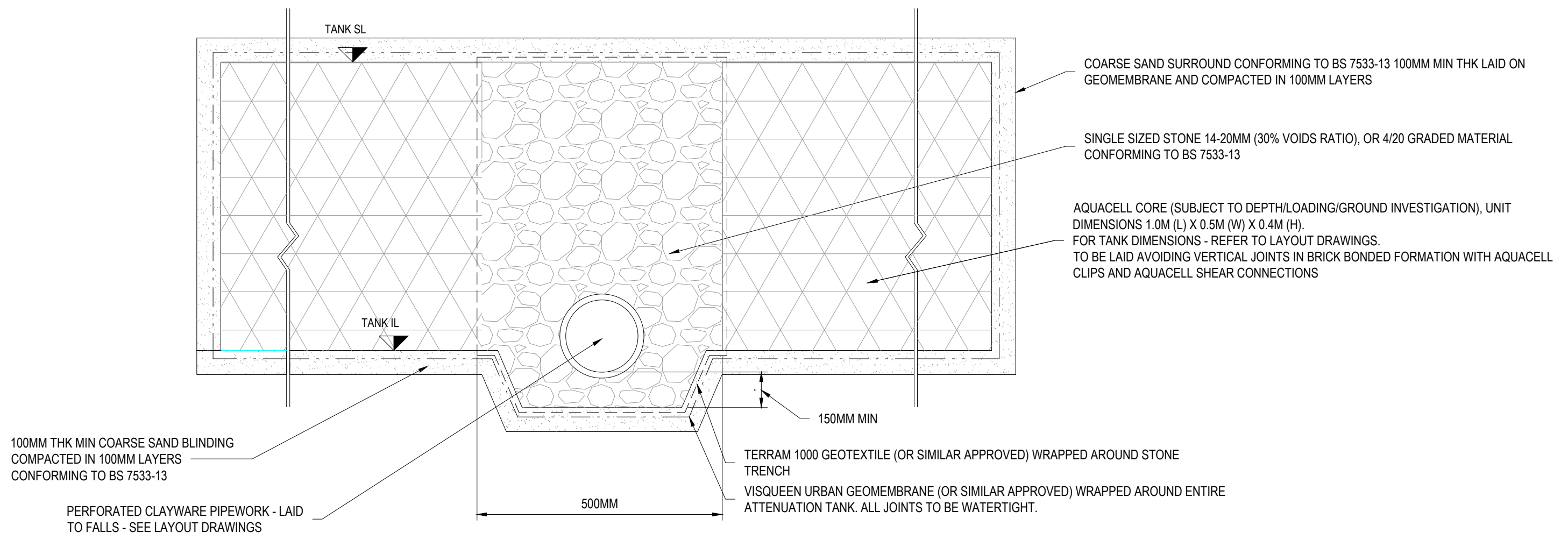
TANK SL
TANK IL
COARSE SAND SURROUND CONFORMING TO BS 7533-13 100MM MIN THK LAID ON GEOMEMBRANE AND COMPACTED IN 100MM LAYERS
SINGLE SIZED STONE 14-20MM (30% VOIDS RATIO), OR 4/20 GRADED MATERIAL CONFORMING TO BS 7533-13
AQUACELL CORE (SUBJECT TO DEPTH/LOADING/GROUND INVESTIGATION), UNIT DIMENSIONS 1.0M (L) X 0.5M (W) X 0.4M (H). FOR TANK DIMENSIONS - REFER TO LAYOUT DRAWINGS. TO BE LAID AVOIDING VERTICAL JOINTS IN BRICK BONDED FORMATION WITH AQUACELL CLIPS AND AQUACELL SHEAR CONNECTIONS
150MM MIN
TERRAM 1000 GEOTEXTILE (OR SIMILAR APPROVED) WRAPPED AROUND STONE TRENCH
VISQUEEN URBAN GEOMEMBRANE (OR SIMILAR APPROVED) WRAPPED AROUND ENTIRE ATTENUATION TANK. ALL JOINTS TO BE WATERTIGHT.
100MM THK MIN COARSE SAND BLINDING COMPACTED IN 100MM LAYERS CONFORMING TO BS 7533-13
PERFORATED CLAYWARE PIPEWORK - LAID TO FALLS - SEE LAYOUT DRAWINGS
500MM

CROSS SECTION B-B
(SCALE 1:20)

TANK DETAIL SHOWN IS FOR AQUACELL PRODUCT. ALTERNATIVE PRODUCT TO BE APPROVED BY THE ENGINEER.

GENERAL NOTES:

1. THIS DRAWING IS TO BE READ IN CONJUNCTION WITH ALL RELEVANT ARCHITECTS AND ENGINEERS DRAWINGS AND SPECIFICATIONS.
2. DO NOT SCALE THIS DRAWING. ANY AMBIGUITIES, OMISSIONS AND ERRORS ON DRAWINGS SHALL BE BROUGHT TO THE ENGINEERS ATTENTION IMMEDIATELY. ALL DIMENSIONS MUST BE CHECKED / VERIFIED ON SITE.
3. ALL DIMENSIONS ARE IN METRES UNLESS NOTED OTHERWISE.
4. FOR GENERAL NOTES REFER TO DRAWING.

INFORMATION REQUIRED SCHEDULE

1. UPDATED CCTV DRAINAGE SURVEY WITH CONFIRMATION OF EXISTING WELSH WATER DRAINAGE ASSET LEVELS.
2. UPDATED TOPOGRAPHICAL SURVEY TO INCLUDE CAR PARK TO WEST.
3. INFILTRATION TESTING TO BRE 365

Rev:	Description:	Date:	By:	Chkd:
P01	STAGE 3 (S4)	03/04/20	JDB	AF

curtins
51-55 Tithebarn Street, Liverpool, L2 2SB
0151 726 2000
liverpool@curtins.com
www.curtins.com

Civils & Structures • Transport Planning • Environmental • Infrastructure • Geotechnical • Conservation & Heritage • Principal Designer
Birmingham • Bristol • Cambridge • Cardiff • Douglas • Dublin • Edinburgh • Glasgow • Kendal • Leeds • Liverpool • London • Manchester • Nottingham

Status: SUITABLE FOR STAGE APPROVAL S4

Project: ROYAL ALEXANDRA HOSPITAL, RHYL

Drg Title: DRAINAGE DETAILS

Size:	Date:	Drawn By:	Designed By:	Checked By:
A0	03/04/2020	JDB	JDB	AF
Scale: AS SHOWN				

Project No:	Originator:	Volume:	Level:	Type:	Role:	Category / Number:	Rev:
NDCH	CUR	ZZ	XX	DR	C	50_10-2001	P01

\\lifs03\projects\074057-Rhyl_Hospital\Q4-Production\4A-Models-Drawings\C\CAD\92\